F4-04ADS 4-Channel Isolated Analog Input

4

In This Chapter. . . .

— Module Specifications
— Setting the Module Jumpers
— Connecting the Field Wiring
— Module Operation
— Writing the Control Program

Module Specifications

The F4-04ADS 4-Channel Isolated Analog Input module provides several features and benefits.

- It accepts four differential voltage or current inputs.
- Inputs have channel-to-channel isolation.
- Analog inputs are also optically isolated from PLC logic components.
- The module has a removable terminal block, so the module can be easily removed or changed without disconnecting the wiring.

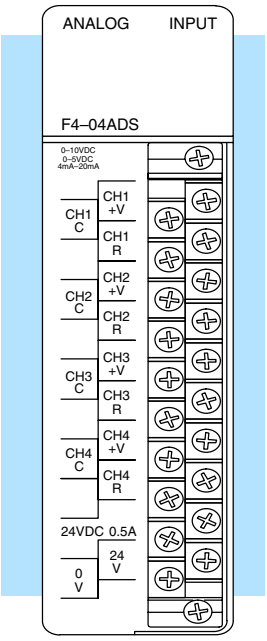

Analog Input Configuration Requirements

The F4–04ADS Analog Input module requires 16 discrete input points from the CPU. The module can be installed in any slot of a DL405 system, including remote bases. The limitations on the number of analog modules are:

- For local and expansion systems, the available power budget and discrete I/O points.
- For remote I/O systems, the available power budget and number of remote I/O points.

Check the user manual for your particular model of CPU for more information regarding power budget and number of local or remote I/O points.

The following tables provide the specifications for the F4-04ADS Analog Input Module. Review these specifications to ensure the module meets your application requirements.

Input Specifications

Number of Channels	4
Input Ranges	0–5V, 0–10V, 1–5V, ±5V, ±10V, 0–20 mA, 4–20 mA
Resolution	12 bit (1 in 4096)
Conversion Method	Successive approximation
Input Type	Differential
Max. Common Mode Voltage	±750V peak continuous transformer isolation
Noise Rejection Ratio	Common mode: –100 dB at 60Hz
Active Low-Pass Filtering	–3 dB at 20Hz, –12 dB per octave
Input Impedance	250Ω ±0.1%, 1/2W current input 200KΩ voltage input
Absolute Maximum Ratings	±45 mA, current input ±100V, voltage input
Conversion Time	1 mS per selected channel
Linearity Error	±1 count (0.025% of full scale) maximum
Full Scale Calibration Error	±8 counts maximum (V_{in} = 20 mA)
Offset Calibration Error	±8 counts maximum (V_{in} = 4 mA)

General Specifications

PLC Update Rate	4 channel per scan max.
Digital Input Points Required	12 binary data bits, 4 active channel indicator bits
Accuracy vs. Temperature	±100 ppm / °C maximum full scale (including maximum offset)
Power Budget Requirement	270 mA @ 5 VDC (from base)
External Power Supply	24 VDC, ±10%, 120 mA, class 2
Recommended Fuse	0.032 A, Series 217 fast-acting, current inputs
Operating Temperature	0 to 60°C (32 to 140°F)
Storage Temperature	–20 to 70°C (–4 to 158° F)
Relative Humidity	5 to 95% (non-condensing)
Environmental air	No corrosive gases permitted
Vibration	MIL STD 810C 514.2
Shock	MIL STD 810C 516.2
Noise Immunity	NEMA ICS3–304

Setting the Module Jumpers

Jumper Locations

The module has several options that you can select by installing or removing jumpers. At the rear of the module are three banks of jumpers:

- One bank of 16 jumpers, which may be configured to select the number of channels enabled, channel range (for channels 1–4), and polarity.
- Two banks of four jumpers; one bank to set the offset voltage for channels 1 and 2, and the other bank to set the offset voltage for channels 3 and 4.

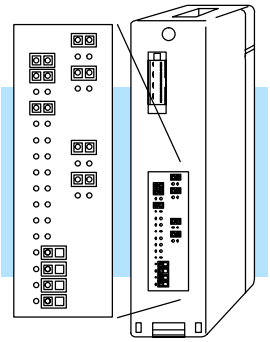

Also included are four additional jumpers to use as needed; each jumper is stored over a single pin on the Channel 3 and Channel 4 ranges (this is a good way to store unused jumpers so they do not get lost).

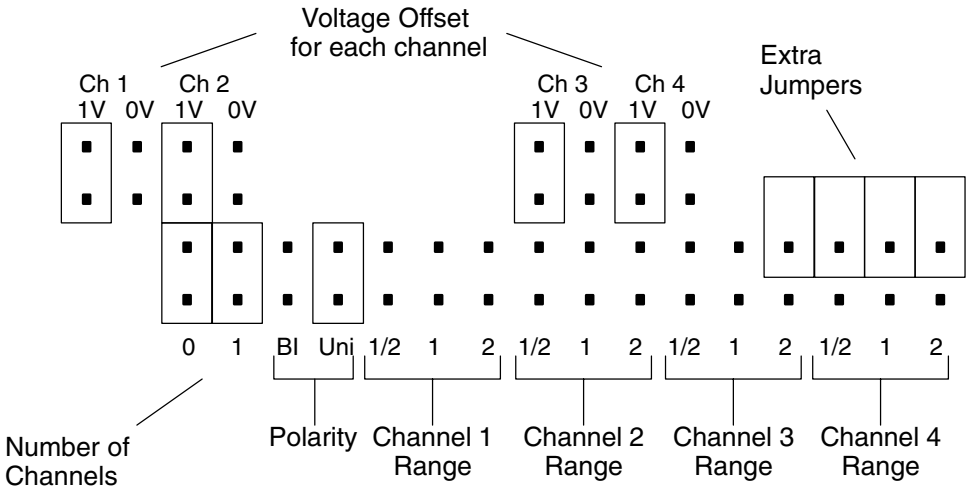

Factory Default Settings

By default, the module arrives from the factory with the jumpers installed or removed as shown here.

With these jumper settings the module is setup as follows:

- With four active channels.
- With each channel set to 1V signal offset.
- With Unipolar polarity mode (this setting will apply to all active channels).
- With 4–20mA signal range for each channel.

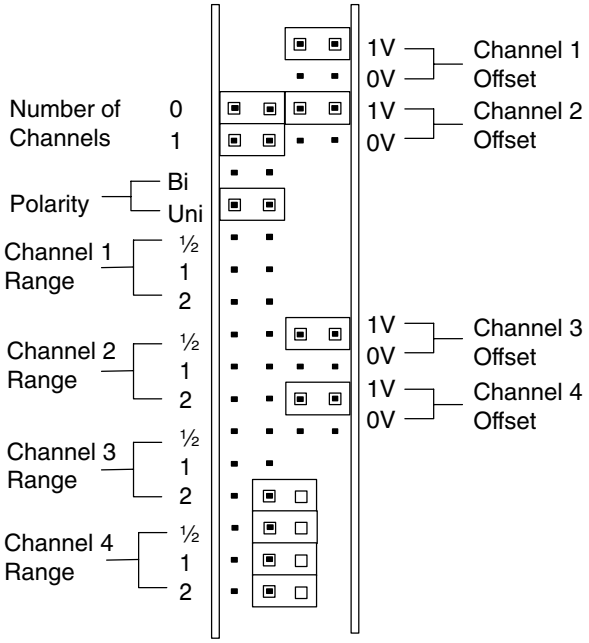

Selecting the Number of Channels

The jumpers labeled 0 and 1 are used to select the number of channels that will be used. The module is set from the factory for four-channel operation.

Any unused channels are not processed. For example, if you only select channels 1 thru 3, channel 4 will not be active. Use the following table to set the jumpers for your application.

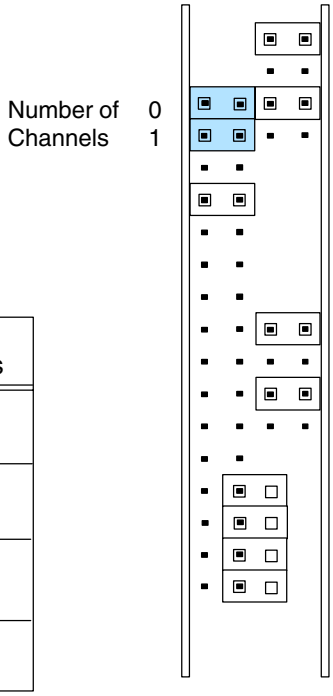

Channels Selected	Jumper Settings
Channels 1	0 1
Channels 1 and 2	0 1
Channels 1, 2 and 3	0 1
Channels 1, 2, 3 and 4	0 1

Example Settings

Once you select the number of channels, you must set the other parameters. Use this example to see how to set the jumpers. The example only shows settings for channel 1 operation, but the procedure is the same for the other channels.

An explanation of the example settings is as follows:

- *Number of Channels:* Both jumpers are removed for one-channel operation.
- *Polarity:* The jumper is set for Bipolar (**Bi**) signal range (**Uni** is the setting for unipolar range).
- *Channel 1 Offset:* The jumper is set for 0V offset.
- *Channel 1 Range:* The jumper is set to “2”, which is ±2.5 VDC (±10mA) when Bipolar signal range is selected (see the tables on the following page for more information).

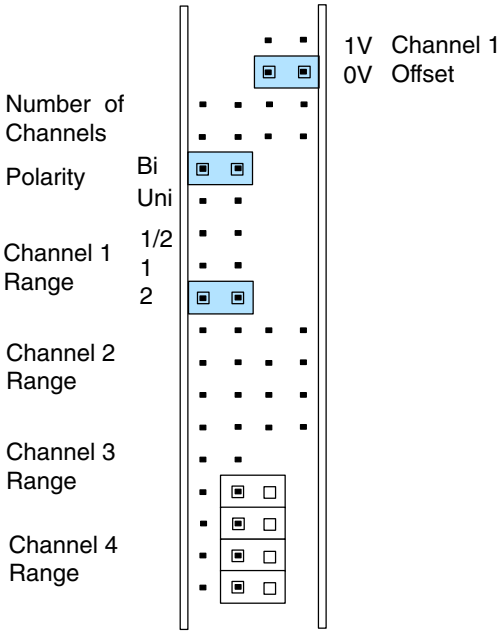

The following tables show the jumper selections for the various ranges. Only channel 1 is used in the example, but all the channels must be set. You can have a combination of offsets and ranges but not polarities for each of the channels. For example, if the polarity is set for unipolar signal range, this setting will apply to all active channels.

Bipolar Signal Range	Jumper Settings
±2.5 VDC (±10 mA)	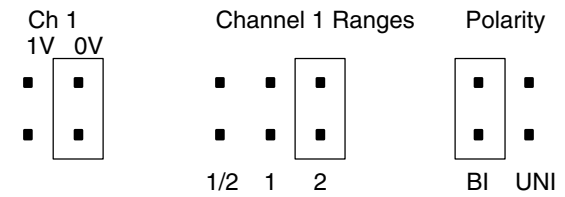
±5 VD (±20 mA)	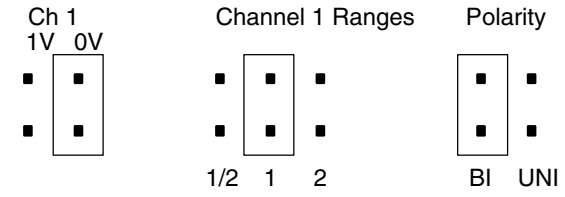
±10 VDC	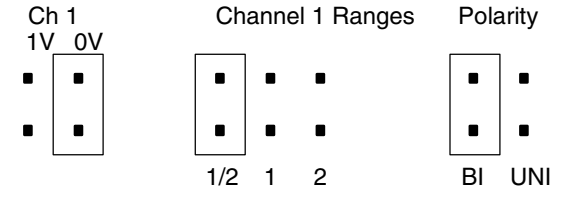
Unipolar Signal Range	**Jumper Settings**
4 to 20 mA (1 VDC to 5 VDC)	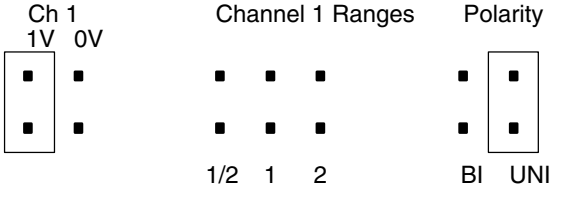
0 VDC to +5 VDC (0 to +20 mA)	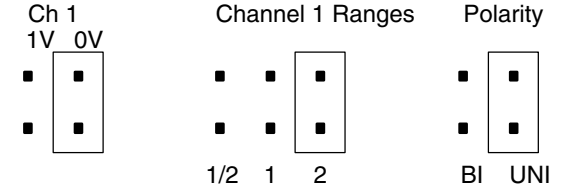
0 VDC to +10 VDC	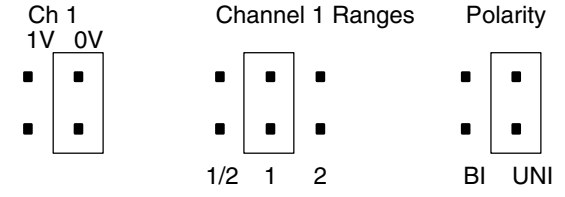

Connecting the Field Wiring

Wiring Guidelines

Your company may have guidelines for wiring and cable installation. If so, you should check those before you begin the installation. Here are some general things to consider.

- Use the shortest wiring route whenever possible.
- Use shielded wiring and ground the shield at the transmitter source. *Do not* ground the shield at both the module and the source.
- Don't run the signal wiring next to large motors, high current switches, or transformers. This may cause noise problems.
- Route the wiring through an approved cable housing to minimize the risk of accidental damage. Check local and national codes to choose the correct method for your application.

User Power Supply Requirements

The F4-04ADS requires a separate power supply. The DL430/440/450 CPU's, D4-RS Remote I/O Controller, and D4-EX Expansion Units have built-in 24 VDC power supplies that provide up to 400mA of current. If you only have a few analog modules, you can use this power source instead of a separate supply. If you have already used the available current from this source, or if you would rather use a separate supply, choose one that meets the following requirements: 24 VDC ±10%, Class 2, 120mA current.

Custom Input Ranges

Occasionally you may have the need to connect a transmitter with an unusual signal range. By changing the wiring slightly and adding an external resistor to convert the current to voltage, you can easily adapt this module to meet the specifications for a transmitter that does not adhere to one of the standard input ranges. The following diagram shows how this works.

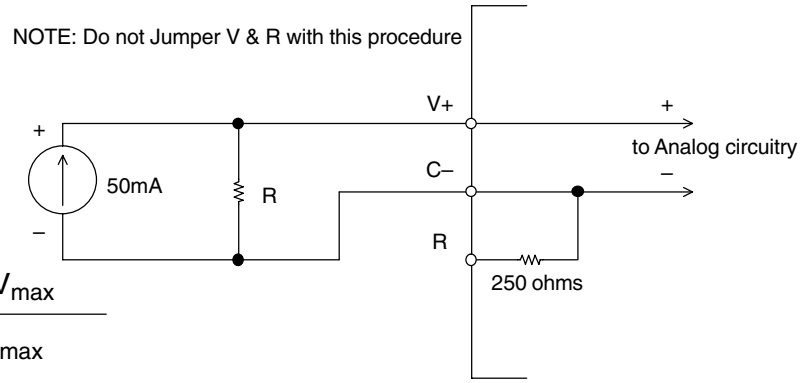

$$R = \frac{V_{max}}{I_{max}}$$

R = value of external resistor

V_{max} = high limit of selected voltage range (5V or 10V)

I_{max} = maximum current supplied by the transmitter

Example: current transmitter capable of 50mA, 0 – 10V range selected.

$$R = \frac{10V}{50mA} \qquad R = 200 \text{ ohms}$$

NOTE: Your choice of resistor can affect the accuracy of the module. A resistor that has ±0.1% tolerance and a ±50ppm / °C temperature coefficient is recommended.

Current Loop Transmitter Impedance

Standard 4 to 20 mA transmitters and transducers can operate from a wide variety of power supplies. Not all transmitters are alike and the manufacturers often specify a minimum loop or load resistance that must be used with the transmitter.

The F4-04ADS provides 250 ohms resistance for each channel. If your transmitter requires a load resistance below 250 ohms, then you do not have to make any adjustments. However, if your transmitter requires a load resistance higher than 250 ohms, then you need to add a resistor in series with the module.

Consider the following example for a transmitter being operated from a 36 VDC supply with a recommended load resistance of 750 ohms. Since the module has a 250 ohm resistor, you need to add an additional resistor.

$R = Tr - Mr$	R – resistor to add
$R = 750 - 250$	Tr – Transmitter Requirement
$R \geq 500$	Mr – Module resistance (internal 250 ohms)

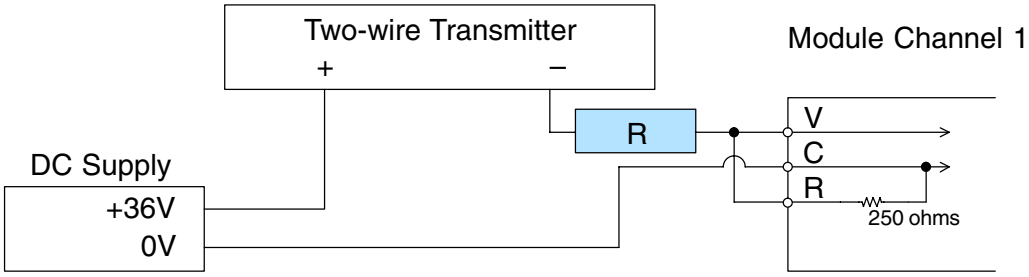

Removable Connector

The F4-04ADS module has a removeable connector to make wiring easier. Simply remove the retaining screws and gently pull the connector from the module.

Wiring Diagram

NOTE 1: Shields should be grounded at the signal source.

NOTE 2: Unused channels should have V & C & R of the channels jumpered together.

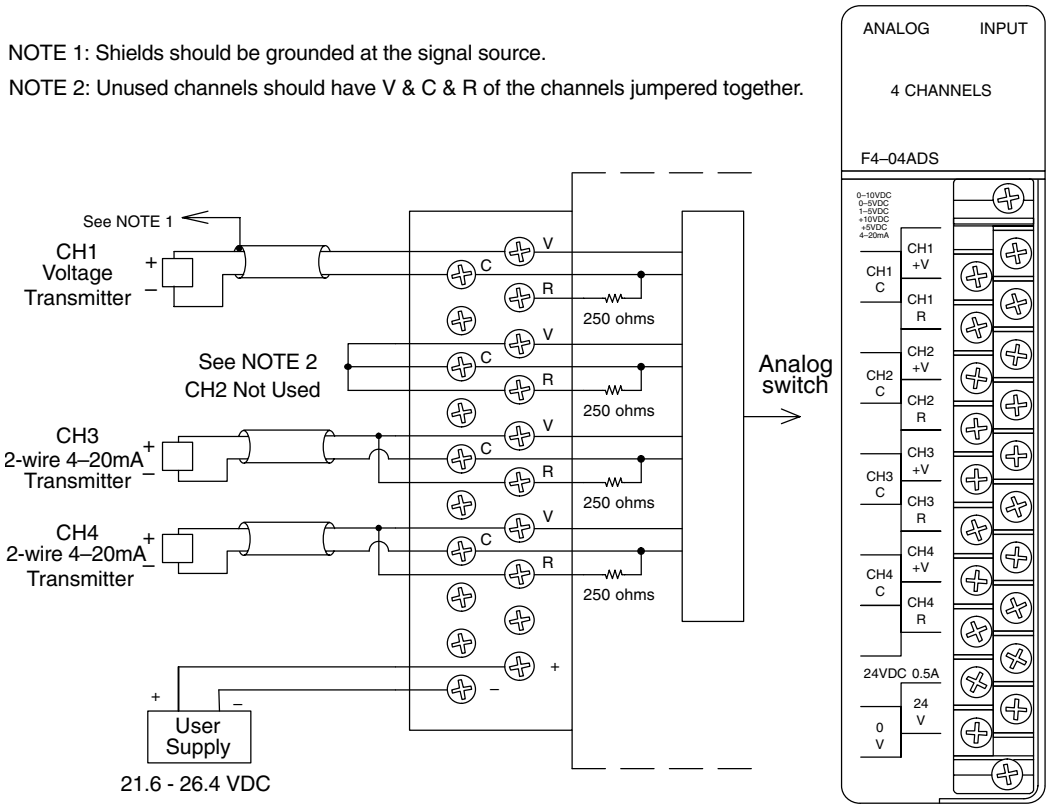

Module Operation

DL430 Special Requirements

Even though the module can be placed in any slot, it is important to examine the configuration if you are using a DL430 CPU. As you can see in the section on writing the program, you use V-memory locations to extract the analog data. As shown in the following diagram, if you place the module so that the input points do not start on a V-memory boundary, the instructions cannot access the data.

Correct!

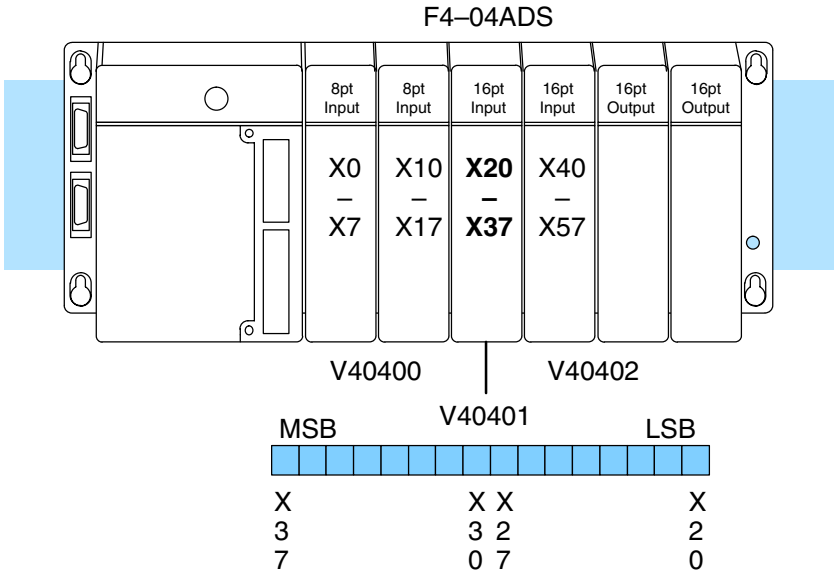

Wrong!

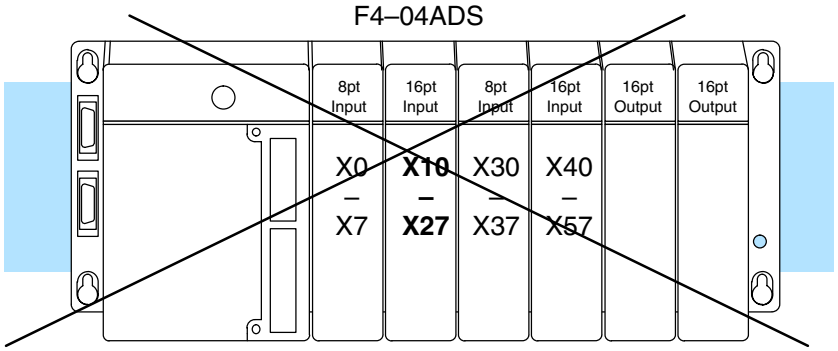

Data is split over two locations, so instructions cannot access data from a DL430.

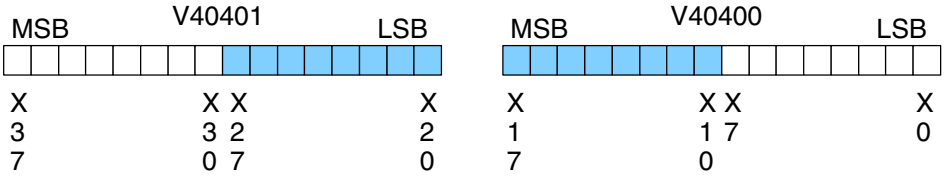

Before you begin writing the control program, it is important to take a few minutes to understand how the module processes and represents the analog signals.

Channel Scanning Sequence

The F4-04ADS module supplies one channel of data per each CPU scan. Since there are four channels, it can take up to four scans to get data for all channels. Once all channels have been scanned the process starts over with channel 1.

Unused channels are not processed, so if you select only two channels, then each channel will be updated every other scan.

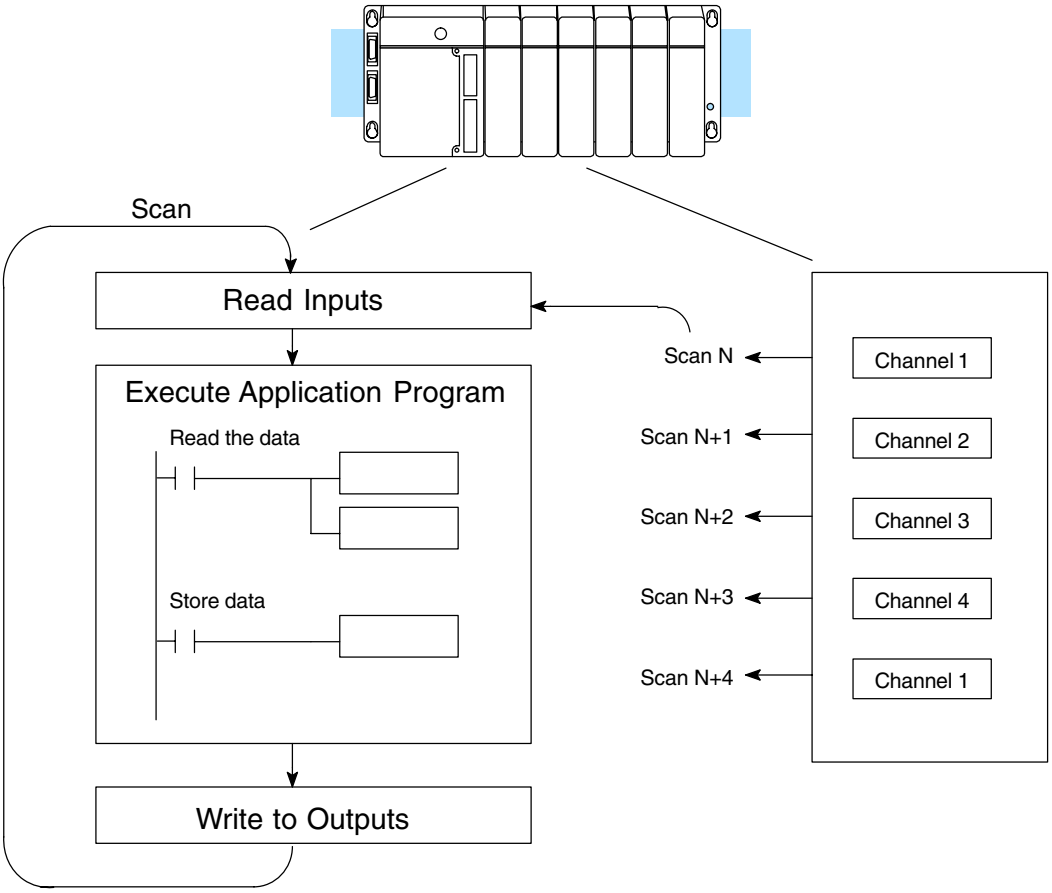

Even though the channel updates to the CPU are synchronous with the CPU scan, the module asynchronously monitors the analog transmitter signal and converts the signal to a 12-bit binary representation. This enables the module to continuously provide accurate measurements without slowing down the discrete control logic in the RLL program.

Input Bit Assignments

The F4-04ADS module requires 16 discrete input points from the CPU. These 16 points provide:

- an indication of which channel is active.
- the digital representation of the analog signal.

Since all input points are automatically mapped into V-memory, it is very easy to determine the location of the data word that will be assigned to the module.

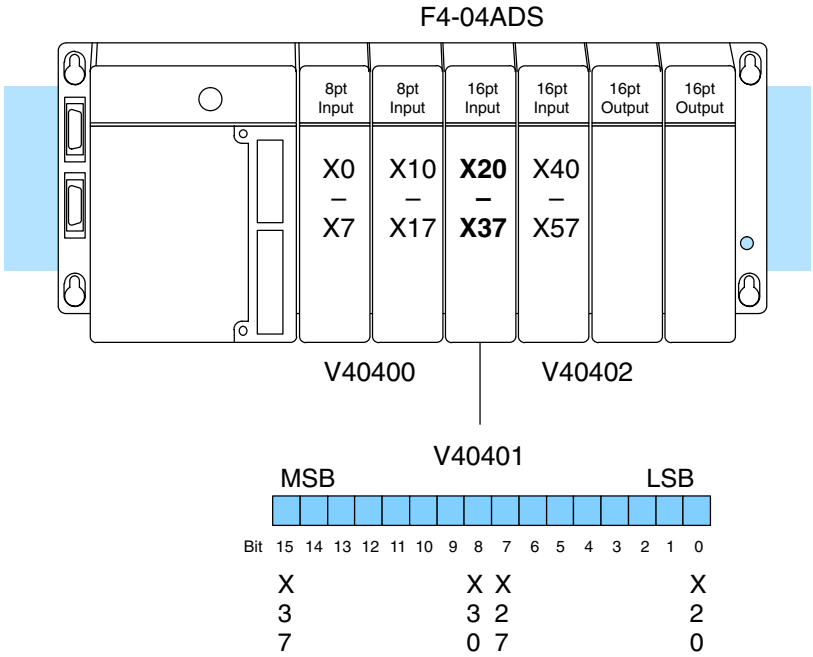

Within this word location, the individual bits represent specific information about the analog signal.

Active Channel Indicator Inputs

The last four bits (inputs) of the upper V-memory location indicate the active channel. The inputs are automatically turned on and off to indicate the current channel for each scan.

Scan	Channel Bits	Channel
N	0001	1
N+1	0010	2
N+2	0100	3
N+3	1000	4

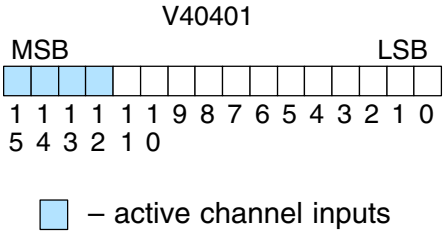

Analog Data Bits

The first twelve bits represent the analog data in binary format.

Bit	Value	Bit	Value
0	1	6	64
1	2	7	128
2	4	8	256
3	8	9	512
4	16	10	1024
5	32	11	2048

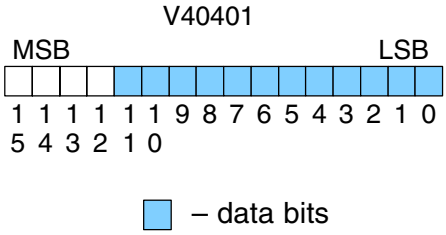

Since the module has 12-bit resolution, the analog signal is converted into 4096 counts ranging from 0 – 4095 (2^{12}). For example, with a 0 to 10V scale, a 0V signal would be 0, and a 10V signal would be 4095. This is equivalent to a binary value of 0000 0000 0000 to 1111 1111 1111, or 000 to FFF hexadecimal. The following diagram shows how this relates to each signal range.

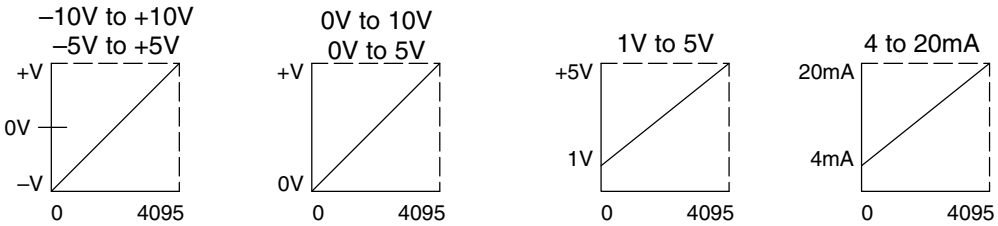

Each count can also be expressed in terms of the signal level by using the equation shown. The following table shows the smallest signal change that will result in a single LSB change in the data value for each signal input range.

$$\text{Resolution} = \frac{H - L}{4095}$$

H = high limit of the signal range

L = low limit of the signal range

Range	Signal Span (H – L)	Divide By	Smallest Detectable Change
±10V	20 V	4095	4.88 mV
±5V	10 V	4095	2.44 mV
0 to 5V	5 V	4095	1.22 mV
0 to 10V	10 V	4095	2.44 mV
1 to 5V	4 V	4095	0.98 mV
4 to 20mA	16 mA	4095	3.91 μA

Writing the Control Program

Once you have configured the F4–04ADS module, use the following examples to get started writing the control program.

Multiple Channels Selected

Since all channels are multiplexed into a single data word, the control program must be setup to determine which channel is being read. Since the module appears as X input points to the CPU, it is very easy to use the active channel status bits to determine which channel is being monitored.

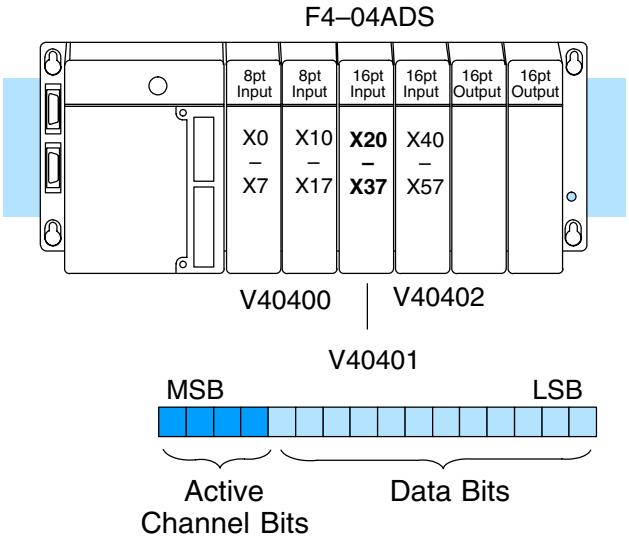

Reading Values, DL440/450

✗	✓	✓
430	440	450

This program example shows how to read the analog data into V-memory locations with DL440/DL450 CPUs. Once the data is in V-memory, you can perform math on the data, compare the data against preset values and so forth. This example reads one channel per scan, so it takes four scans to read all four channels.

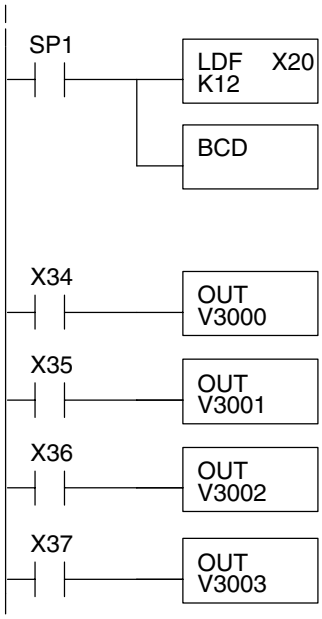

Loads the first 12 bits of the data word into the accumulator (starting with location X20).

Converts the binary value in the accumulator to BCD and stores the result in the accumulator. It is usually easier to perform math operations in BCD, so it is best to convert the data to BCD immediately. You can leave out this instruction if your application does not require it. Do not use this instruction if you are going to send the data to an internal PID loop because the PID loop requires the PV (process variable) to be in binary format.

When contact X34 is on, channel 1 data is being sent to the CPU. The OUT instruction moves the data from the accumulator to V3000.

When contact X35 is on, channel 2 data is stored in V3001.

When contact X36 is on, channel 3 data is stored in V3002.

When contact X37 is on, channel 4 data is stored in V3003.

Note, this example uses SP1, which is always on and the inputs are continually being updated. You could also use an X, C, etc. permissive contact.

Reading Values, DL430

✓ ✓ ✓
430 440 450

The following program example shows how to read the analog data into V-memory locations with the DL430 CPU. Since the DL430 does not support the LDF instruction, you can use the LD instruction instead as shown. The example also works for DL440 and DL450 CPUs. This example will read one channel per scan, so it will take four scans to read all four channels.

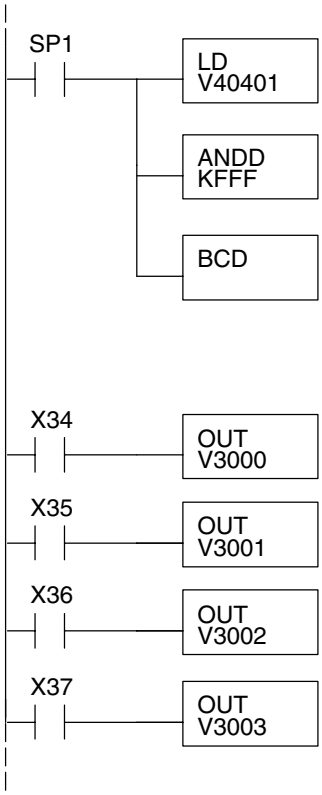

Loads the complete data word into the accumulator. The V-memory location depends on the I/O configuration. See Appendix A for the memory map.

ANDs the value in the accumulator with the constant KFFF, which masks the channel identification bits, and stores the vaue in the accumulator. Without this, the values used will not be correct, so do not forget to include it.

Converts the binary value in the accumulator to BCD and stores the result in the accumulator. It is usually easier to perform math operations in BCD, so it is best to convert the data to BCD immediately. You can leave out this instruction if your application does not require it. Do not use this instruction if you are going to send the data to an internal PID loop because the PID loop requires the PV (process variable) to be in binary format.

When contact X34 is on, channel 1 data is being sent to the CPU. The OUT instruction moves the data from the accumulator to V3000.

When contact X35 is on, channel 2 data is stored in V3001.

When contact X36 is on, channel 3 data is stored in V3002.

When contact X37 is on, channel 4 data is stored in V3003.

Note, this example uses SP1, which is always on and is continually being updated. You could also use an X, C, etc. permissive contact.

Single Channel Selected

✓ ✓ ✓
430 440 450

Since you do not have to determine which channel is selected, the single channel program is even more simple.

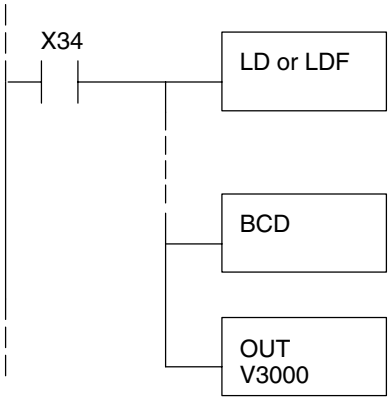

When X34 is on, channel 1 data is being sent to the CPU. Use the LD instruction when using a DL430 CPU.*

The BCD instruction converts the data from binary to BCD. You can leave out this instruction if your application does not require it.

The OUT instruction stores the data in V3000.

* Remember, before the BCD instruction is executed, the DL430 requires an additional instruction to mask out the first four bits that are brought in with the LD instruction. An example of how to do this using an ANDD instruction is shown in the previous section.

Reading Four Channels in One Scan, DL440/450 Only

430	440	450
✗	✓	✓

The following program shows you how to read all four channels in one scan by using a FOR/NEXT loop. Remember, this routine will lengthen the scan time. If you do not need to read the analog data on every scan, change the SP1 to a permissive contact (such as X input, CR, or stage bit) to only enable the loop when it is required.

NOTE: Do not use this FOR/NEXT loop program to read the module in a remote/slave arrangement; it will not work. Use one of the programs that reads one channel per scan.

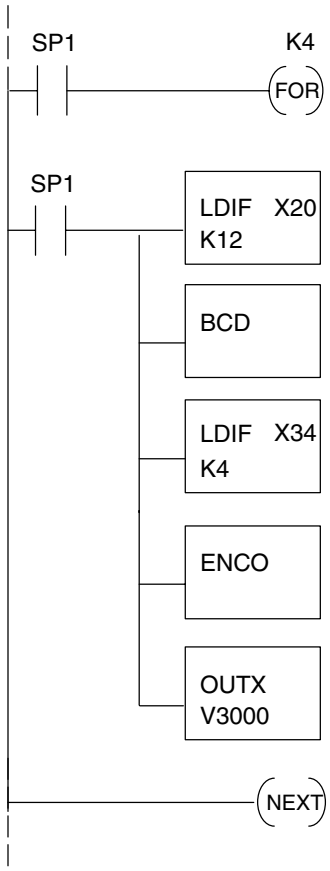

Starts the FOR/NEXT loop. The constant (K4) specifies how many times the loop will execute, equal to the number of channels you are using. For example, enter K3 if you are using 3 channels.

Loads immediate 12 bits of the data word into the accumulator. The LDIF instruction retreives the I/O points without waiting for the CPU to finish the scan.

Changes the value in the accumulator to BCD. You can leave this out if it is not required (such as for PID loops).

Loads immediate 4 bits of the data word into the accumulator. The LDIF instruction retreives the I/O points without waiting for the CPU to finish the scan.

The ENCO instruction encodes the bit position in the accumulator having a value of 1, and returns the corresponding binary representation.

The OUTX instruction copies a 16 bit value from the accumulator to V3000.

One of the four active channel bits will be on each time through the FOR/NEXT loop, indicating the active channel. The corresponding OUT instruction places the 12 or 16-bit value in the accumulator in the proper V-memory location.

Note: This example uses SP1, which is always on. You could also use an X, C, etc. permissive contact.

Scaling the Input Data

Most applications usually require measurements in engineering units, which provide more meaningful data. This is accomplished by using the conversion formula shown.

You may have to make adjustments to the formula depending on the scale you choose for the engineering units.

$$\text{Units} = A\,\frac{H - L}{4095}$$

H = high limit of the EU range

L = low limit of the EU range

A = Analog value (0 – 4095)

For example, if you wanted to measure pressure (PSI) from 0.0 to 99.9 then you would have to multiply the analog value by 10 in order to imply a decimal place when you view the value with the programming software or a handheld programmer. Notice how the calculations differ when you use the multiplier.

Analog Value of 2024, slightly less than half scale, should yield 49.4 PSI

Example without multiplier

$$\text{Units} = A\ \frac{H - L}{4095}$$

$$\text{Units} = 2024\ \frac{100 - 0}{4095}$$

$$\text{Units} = 49$$

Handheld Display

V 3101 V 3100
V MON 0000 0049

Example with multiplier

$$\text{Units} = 10\ A\ \frac{H - L}{4095}$$

$$\text{Units} = 20240\ \frac{100 - 0}{4095}$$

$$\text{Units} = 494$$

Handheld Display

V 3101 V 3100
V MON 0000 0494

This value is more accurate

Here is how you would write the program to perform the engineering unit conversion.

Note, this example uses SP1, which is always on. You could also use an X, C, etc. permissive contact.

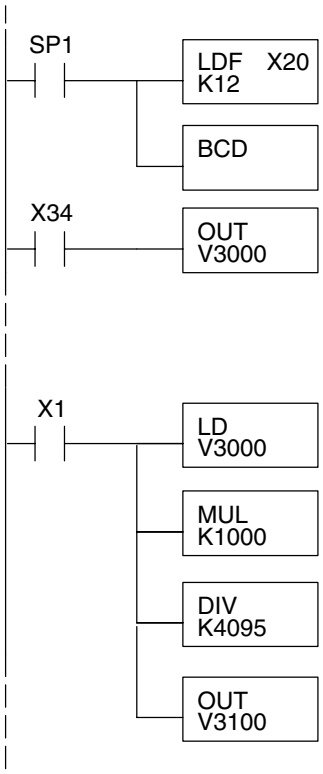

Loads the data word into the accumulator. The X address depends on the I/O configuration.

Since we are going to perform some math operations in BCD, this instruction converts the data format from binary to BCD.

When X34 is on, channel 1 data is being sent to the CPU. The OUT instruction moves the data from the accumulator to V3000.

When X1 is on, channel 1 data is loaded into the accumulator.

Multiplies the accumulator contents by 1000 (to start the conversion).

Divides the accumulator contents by 4095.

Stores the converted result in V3100.

Analog and Digital Value Conversions

Sometimes it is helpful to be able to quickly convert between the signal levels and the digital values. This is especially useful during machine startup or troubleshooting. The following table provides formulas to make this conversion easier.

Range	If you know the digital value ...	If you know the signal level ...
±10V	$A = \frac{20D}{4095} - 10$	$D = \frac{4095}{20}(A + 10)$
±5V	$A = \frac{10D}{4095} - 5$	$D = \frac{4095}{10}(A + 5)$
0 to 5V	$A = \frac{5D}{4095}$	$D = \frac{4095}{5}(A)$
0 to 10V	$A = \frac{10D}{4095}$	$D = \frac{4095}{10}(A)$
1 to 5V	$A = \frac{4D}{4095} + 1$	$D = \frac{4095}{4}(A - 1)$
4 to 20mA	$A = \frac{16D}{4095} + 4$	$D = \frac{4095}{16}(A - 4)$

For example, if you are using the ±10V range and you have measured the signal at 6V, you would use the following formula to determine the digital value that should be stored in the V-memory location that contains the data.

$$D = \frac{4095}{20}(A + 10)$$

$$D = \frac{4095}{20}(6V + 10)$$

$$D = (204.75)\ (16)$$

$$D = 3276$$